TS400051

TECHNICAL SPECIFICATION OF PANTOGRAPH PURE ELECTRIC COCO LOCOMOTIVE PROJECT

Research and Development Coordinator	Serkan Çökmez	
Electrical Machines Factory Manager	Necati Coşkun Otaş	
Locomotive Factory Manager	Oğuzhan Hoşgör	
Quality Control Coordinator	Tuba N. Eroğlu	

Prepared By	Büşra Aşkın	Güzin Tutar		
Date of Prep.	23.02.2026			

Revision Table			
Rev.	**Date**	**Description of Revision**	**Revised By**
A	09.10.2026	Clauses 4.2 has been updated. Clauses 5.1 has been updated. Clauses 5.2, 5.5, and 16 have been updated. Clauses 12, Table 7 has been updated.	Büşra AŞKIN

CONTENT

1. SUBJECT AND SCOPE 6
2. DEFINITIONS & REFERENCE DOCUMENTS 7
2.1. INTRODUCTION 7
2.2. ACRONYMS AND DEFINITIONS 7
2.3. REFERENCE DOCUMENTS 8
2.4. SCOPE OF SUPPLY 9
2.4.1. Hardware 9
2.4.2. Software 9
2.4.3. Special Tools 10
3. STANDARDS TO BE COMPLIED 11
4. TSI REQUIREMENTS AND DOCUMENTATION 13
4.1. TSI CERTIFICATION 13
4.2. EC CERTIFICATION OF CONFORMITY AS INTEROPERABILITY CONSTITUENCE 14
5. TECHNICAL SPECIFICATIONS 15
5.1. INTRODUCTION 15
5.2. PANTOGRAPH REQUIREMENT 15
5.2.1. Line characteristics 15
5.2.2. Pantograph Main Characteristics 16
5.2.3. Pneumatic Control Unit 16
5.2.4. Static Force 17
5.2.5. Pantograph vs catenary interface 17
5.3. MANUFACTURING 18
5.4. PAINTING 18
5.5. INTERFACE SPECIFICATION 18
5.5.1. Mechanical Interface between pantograph and the locomotive 18
5.5.2. Electrical Interface 20
5.5.3. Pneumatic Interface 20
5.5.4. Digital and/or Analogue Inputs/Outputs 22
5.5.5. Earthing 22
5.6. ENVIRONMENTAL CONDITIONS 23
5.6.1. Climatic condition 23
5.6.2. Noise, Vibration and Shock 23
5.6.3. Protection (IP) 23
5.6.4. Electromagnetic Compatibility (EMC) 23
5.7. SYSTEM AND COMPONENTS LIFE 23
5.8. MATERIAL REQUIREMENT 24
5.8.1. General Requirements 24
5.8.2. Fire Resistance Behaviour 24
5.8.3. Smoke opacity and toxicity 25
5.9. WEIGHT 25
5.10. LABELS/MARKING 25
6. RELIABILITY, AVAILABILITY, MAINTAINABILITY AND SAFETY (RAMS) REQUIREMENTS 26

7. TRAINING AND MANUAL 26
7.1. TRAINING 26
7.2. MAINTENANCE MANUAL 27
7.2.1. Main Features Of The Manual 27
7.2.2. Contents Of The Manual 27
7.2.3. Format Of The Manual 29
8. TESTING, INSPECTION AND ACCEPTANCE 30
8.1. INTRODUCTION TO TEST AND INSPECTION 30
8.2. TYPE TESTS 31
8.3. ROUTINE TESTS 31
8.4. FIRST ARTICLE INSPECTION 31
8.5. CONTRACTOR TECHNICAL ASSISTANCE 32
8.6. COMMISSIONING 33
8.6.1. Type Commissioning Test 33
8.6.2. Routine Commissioning Test 33
9. AUTHORIZATION TO START PRODUCTION 34
9.1. DESIGN FREEZING 34
9.2. AUTHORIZATION TO START PRODUCTION 34
9.3. AUTHORIZATION TO START MASS PRODUCTION 34
10. ACCEPTANCE 35
11. PACKAGING AND STORAGE CONDITIONS 36
11.1. PACKAGING 36
11.2. STORAGE CONDITIONS 37
11.3. MOUNTING AND HANDLING 37
12. DOCUMENTS TO BE DELIVERED TO THE ADMINISTRATION ALONG WITH THE PRODUCT/EQUIPMENT 38
13. INTELLECTUAL AND INDUSTRIAL PROPERTY ISSUES 41
14. WARRANTY 42
14.1. WARRANTY CONDITION 42
14.2. SYSTEMATIC FAULT / EPIDEMIC FAILURE 42
15. OTHER ISSUES 43
16. ANNEXES AND NOTES 44
16.1. Interchangeability 44

I. LIST OF TABLES

Table 1 – Definition 8
Table 2 – Reference Documents 8
Table 3 – Material Quantity 9
Table 4 – Applicable Standards 13
Table 5 – Line Power Supply System Characteristics 15
Table 6 – Materials Fire Behaviour 24
Table 7 – Stage 1 Offer Phase: list of requested documents and due date 38
Table 8 – Stage 2 list of requested documents and due date 39
Table 9 – Stage 3 list of requested documents and due date 39

II. LIST OF FIGURES

Figure 2 – Pneumatic Concept Scheme 21

1. SUBJECT AND SCOPE

This technical specification describes the minimum technical requirements for the procurement of the PANTOGRAPH EQUIPMENT to be installed on the COCO LOCO (hereafter called LOCO) produced by Turkish Railway Vehicles Industry Inc.- TÜRASAŞ (hereafter called ADMINISTRATION).

The Bidder shall offer a solution totally compliant with the requirements of this specification.

After signing the contract, possible deviations from this specification or from other specifications and norms mentioned in this specification, shall be validated by written agreements between Administration and the Contractor.

The Bidder shall make clause by clause comment into present technical specification together with their offer.

This Technical Specification and its annexes have been prepared in Turkish and English. In case of any discrepancy between the two, the Turkish language shall prevail.

IMPORTANT NOTE:
The present document shall be examined by the Bidder, together with the following document:
TŞ400048 – ELECTRIC LOCO General Technical Specification
in order to know general applicable requirements established at LOCO level.

2. DEFINITIONS & REFERENCE DOCUMENTS

2.1. INTRODUCTION

In this Technical Specification, the following definitions apply:

- **"The End Client"** means the Legal entities or private persons operating on the national railway lines of the Republic of Türkiye with using the COCO LOCO.
- **"Final User"** means the contracting authority: The End Client or its staff who is in charge of use, maintenance, repair etc. the COCO LOCO.
- "**the Administration**" means the Turkish Railway Vehicles Industry Inc. (TÜRASAŞ)
- "**the Contractor**" means the company who wins the tender to supply the good object of this specification
- "**the Bidder**" means the company who want to join to the tender to supply the good object of this specification.
- "**Documentation**" means all or any specifications, drawings, reports, networks, operating and maintenance manuals and all other information whether on paper or on magnetic or other format which is prepared by the Contractor in the course of the contract

2.2. ACRONYMS AND DEFINITIONS

Abbreviations and technical terms in the technical specifications and their annexes will be interpreted as follows.

Acronyms	Description
ADD	Automatic Dropping Device
CAD	Computer Aided Drawing
CBM	Condition-based maintenance
COCO LOCO	Electric Mainline Locomotive
CSM	Document 402/2013/EU of the European Commission (General security method for Risk Assessment)
EC	European Community
EMC	Electromagnetic Compatibility
EN	European Standard
ERTMS	European Train Control System
FAI	First Article Inspection
HV	High Voltage
I/F	Interfaces
IRIS	International Railway Industry Standard
ISO	International Standard Organization
LCC	Life Cycle Cost
LRU	Line Replaceable Unit
LV	Low Voltage
MKBF	Mean Kilometer Between Failure
MKBSF	Mean Kilometers Between Service Failures
MTBF	Mean Time Between Failures

This Technical Specification cannot be REPRODUCED OR USED for any purposes without the written consent of TÜRASAŞ

MV	Medium Voltage
N/A	Not Applicable
NoBo	Notified Body
RAMS	Reliability - Availability- Maintainability- Safety
TBC	To be confirmed
TBD	To be defined
TCDD	General Directorate Of Turkish State Railways
TCMS	Train Control Management System
TS	Technical Specification
TSE	Turkish Standards Institute
TSI	Technical Specification of Interoperability
TSI CCS	Document 2016/919/EU of the European (Interoperability technical specifications for 'control-command and signalling subsystems of the Trans-European railway system)
TSI LOC&PAS	Document 1302/2014/EU and relative amendments of the European Commission (Technical specification for interoperability relating to the rolling stock — locomotives and passenger rolling stock subsystem of the rail system in the European Union)
TSI NOI	Document 1304/2014 / EU of the European Commission (Railway vehicles - technical specification for mutual operability related to 'noise')
TSI SRT	Document 1303/2014 / EU of the European Commission (technical specifications for the mutual operability of the Trans-European Conventional and High-Speed railway system concerning 'security in railway tunnels')
UIC	International Railway Association
UNI	National Standards Unit

Table 1 – Definition

2.3. REFERENCE DOCUMENTS

In the following table the documents used for reference document.

Ref	Document	Title
1	TS400048	Electric Loco General Technical Specification
2	TB50160	Standard List
3	TB50165	RAMS Target Allocation
4	012GX0000201-000	Electric type Locomotive Mechanical Lay-out
5	T.B. 2348	The rules that the contractor id to obey and the responsibility of the contractor

Table 2 – Reference Documents

2.4. SCOPE OF SUPPLY

2.4.1. Hardware

The Bidder/Contractor shall provide all relevant components related to the pantographs, installed in roof of the COCO LOCO:

The quantity of pantographs is given as in the following table

Part Name	Per LOCO
Single arm complete pantograph with pan/heads of 1600mm, insulators and relevant pneumatic control equipment	2
PCU	2
Insulated Pipes	4
Installation materials (Screw, bolt, brackets, pneumatic connections etc.) for mechanical, pneumatical and electrical fixations and connection	2 set
If any, all other equipment and material which is necessary for functionality and installation of pantograph equipment	2 set

Table 3 – Material Quantity

2.4.2. Software

NA

2.4.3. Special Tools

Generally, the usage of special tools shall be avoided to perform preventive and corrective maintenance.
If this is not possible, the Bidder/Contractor shall provide a list of tools and 2 complete sets of special tools free of charge.

Nevertheless, if they are essential for maintenance (upon Contractor and ADMINISTRATION agreement), following information shall be supplied in a dedicated section of the Maintenance Manual:

- descriptions and technical data (including SW if present)
- drawings(2D/3D)
- use instructions
- list of tasks where the tools usage is mandatory (and of course Maintenance Cards shall refer to the relevant special tools when is needed)
- all the information for purchasing it correctly (technical data, builder, price, and so on) if the special tool is available on the market

The Contractor shall provide the software tools necessary to manage the life cycle of the system (monitoring and troubleshooting SW, special connection cables and adaptors, diagnostics and CBM data cloud access and analysis, etc.).

This Technical Specification cannot be REPRODUCED OR USED for any purposes without the written consent of TÜRASAŞ

3. STANDARDS TO BE COMPLIED

The COCO LOCO shall be designed, assembled and tested according to the following international reference standards:

- **European Standards:** TSI, EN
- **International Standards:** UIC, ISO, IEC
- **Other International Standards:** DIN, NF F, UNI, CEI, etc.
- **National Standards:** Technical documents published in accordance with TSE directives and related annexes
- **Unit System:** SI (International System of Units)

The Bidder/Contractor shall comply with the directives, standards, and requirements listed in the order of priority defined above in the conformity assessments to be carried out by the Bidder/Contractor and/or in other conditions that must be met for the product covered by this Technical Specification and the equipment and sub-components that constitute this product, but which are not specified in this Technical Specification.

Where compliance with these directives, standards, and requirements is not possible, other relevant international standards, European standards, national standards, TCDD guidelines, and conditions required by national legislation may be used.

If a gap exists in the standards with the defined order of priority, such a gap shall be filled by the subsequent standard.

In case of any amendments to the standards/norms referred to under this clause during the execution of the Contract:

- The Contractor shall notify the Employer in writing within twenty (20) working days following the date of entry into force of such amendment.
- Within one (1) calendar month after providing such notification, the Contractor shall prepare the necessary processes to comply with the new requirements and submit them to the Employer for approval. However, the approval process shall not exceed two (2) months (60 calendar days) from the date the amendment enters into force.
- The Employer shall review the process and notify the Contractor of its decision within fifteen (15) working days.

Amendments to directives, standards, or norms shall not prevent completion of certification.

By reviewing this Technical Specification and its annexes, the Bidder/Contractor shall confirm that the product, its constituent equipment and sub-components comply with the latest applicable versions of the relevant standards.

The Bidder/Contractor shall be obliged to notify the Employer in writing, together with proposals, in case of:

- any inconsistency, contradiction, or violation with international standards,
- problems that may arise in implementation,
- matters that are deemed technically beneficial to amend,
- issues not specified in this Technical Specification or its annexes but necessary/mandatory for the manufacture of the system/equipment.

The complete standards list is indicated in document TB50160.

The Bidder/Contractor should satisfy the specific standards indicated in Table 4.

Standard	Title
EN 17050	Conformity assessment - Contractor's declaration of conformity
EN 45545	Railway applications - Fire protection on railway vehicles
EN 50121	Railway applications. Electromagnetic compatibility
EN 50124	Railway applications. Insulation coordination.
EN 50125-1	Railway applications - Environmental conditions for equipment - Part 1: Rolling stock and on-board equipment
EN 50126	Railway applications. The specification and demonstration of reliability, availability, maintainability and safety (RAMS).
EN 50153	Railway applications. Rolling stock. Protective provisions relating to electrical hazards
EN 50155	Railway applications - Electronic equipment used on rolling stock
EN 50206	Railway applications. Rolling stock. Pantographs: characteristics and tests.
EN 50317	Railway applications. Current collection systems. Requirements for and validation of measurements of the dynamic interaction between pantograph and overhead contact line
EN 50367	Railway applications. Current collection systems. Technical criteria for the interaction between pantograph and overhead line
EN 50405	Railway applications. Current collection systems. Pantographs, testing methods for contact strips
EN ISO 14040	Environmental management - Life cycle assessment - Principles and framework
IEC 60529	Degrees of protection provided by enclosures (IP Code)
IEC 61373	Railway applications – Rolling stock equipment – Shock and vibration tests
TSI CCS 2016/796	Technical Specification of Interoperability: Control Command and Signalling TSI
TSI LOC&PAS 1302/2014	Technical Specification of Interoperability: Rolling Stock - locomotives and passenger rolling stock subsystem of the rail system in the European Union
TSI Noise 1304-2014	Technical Specification of Interoperability: Noise

This Technical Specification cannot be REPRODUCED OR USED for any purposes without the written consent of TÜRASAŞ

TSI SRT 1303/2014	Technical Specification of Interoperability: Safety in Railway Tunnels
UIC 608	Conditions to be complied with for the pantographs of tractive units used in international services
UIC 611	Regulations governing acceptance of electric locomotives, power cars and multiple units sets for running on international services

Table 4 – Applicable Standards

The Bidder shall review and confirm compliancy to the above list of applicable norms; any deviation shall be submitted to ADMINISTRATION for approval.

4. TSI REQUIREMENTS AND DOCUMENTATION

4.1. TSI CERTIFICATION

The COCO LOCO shall be certified according to current version TSI LOC/PAS, TSI NOI, TSI PRM, TSI SRT and TSI CCS by Notified Body (NoBo) / Designated Body (DeBo). The Contractor shall provide whole calculations, drawings, analysis, test reports and other kind of documentation which is requested by TSIs for the present Scope of Supply. Within the scope of Supply, Contractor Provide the documentation required for the compliance matrix to be created by NoBo.

The Contractor/Bidder shall provide the declaration of conformity of its Scope of Supply to the relevant technical specifications and applicable norms.

The declaration of conformity shall be in accordance with the EN17050 Norm and shall include also the following documents:

- Conformity declaration (The bidder shall submit it at Stage 1, see §12 Table 7)
- Conformity report with all conformity evidence (The Contractor shall submit it at Stage 3, see §3.13Table 9)
- Type test reports (The Contractor shall submit them at Stage 3, see §12 Table 9)
- 3.1 certificates for the products according to EN 10204 (the Contractor will submit them in Stage 3, see § 12 Table 8) will be delivered to the Administration by the Contractor.

The documentation presented by the Contractor/Bidder relevant to the Conformity report with all conformity evidence and test reports will be examined for approval by the NoBo/DeBo in charge of certification of the LOCO.

If there is a need for corrections to the documents or new documents are required depending on the examinations made by the NoBo/DeBo, the relevant documents will be provided by the Contractor.

The Contractor is obliged to meet the documents that are not foreseen at the tender stage but are requested by NoBo later.

4.2. EC CERTIFICATION OF CONFORMITY AS INTEROPERABILITY CONSTITUENCE

The components (panto and contact strips) object of present Technical Specification are Interoperability Constituent.
The Bidder can join the tender with EC Certification of Conformity or by submitting a written undertaking that the certificate will be delivered.

In any case the pantograph and contact strip equipment shall be supplied with its own EC certification of conformity according to the applicable and valid TSI regulation by the Supplier.

The documentation related to the EC Certification of Conformity as per previous paragraph shall be accessible for examination by the Notified Body / Designated Body (DeBo) in charge of TSI certification nominated by ADMINISTRATION

The Contractor /Bidder shall enable an assessment by the NoBo/DeBo at the supplier's location.

5. TECHNICAL SPECIFICATIONS

5.1. INTRODUCTION

This document defines the requirement for the design and test of the pantograph for the loco project, to supply power for HV loco systems.

5.2. PANTOGRAPH REQUIREMENT

Each Loco has installed a couple of HV 25kV pantographs on the roof, to transfer energy/power from catenary line to HV services to the loco.

The loco is provided with two pantographs. Only one pantograph is working during service, while the second one is lowered.

For each pantograph the minimum supply is composed by the following main components:

a) Pantograph complete frame (base, lower frame, upper frame)
b) Electrical equipment (cables, terminals)
c) Pneumatic equipment (Control, actuator, bellow, damper, valves, pressure-stat, ...)
d) Pan head (1600mm)
e) Insulators (on the mounting feet)
f) Insulating hoses
g) Pressure safeguard (including ADD)
h) Contact strip
i) All the other elements listed in section 2.4

5.2.1. Line characteristics

Table below reports the line Power Supply System characteristics.

Type of Power Supply System	25.000 V AC 50Hz
Nominal voltage	25.000 V (EN 50163)
Minimum working voltage	19.000 V
Maximum working voltage	27.500 V
Minimum abnormal voltage	17.500 V
Maximum abnormal voltage (10s)	30.000 V

Table 5 – Line Power Supply System Characteristics

- Max current to be considered, in steady state: 80A.
- Max current to be considered, when locomotive is in motion: 420A

5.2.2. Pantograph Main Characteristics

The pantograph head shall be of the continuous profile type, with nr. 2 contact strips arranged in one rotating pan head.

The pan head profile shall be compliant with the 1600 mm type defined in the Figure A.6 of Annex A.2 of the EN 50367.

The maximum width of the pan head shall be 520 mm and each contact strips width shall be 40 mm.

The contact strips length shall be 1030 mm.

The pan head horns shall be insulated type.

The pan head shall be equipped with a safe automatic dropping device (ADD)

The pantograph lifting system shall be pneumatic and the contact force shall be regulated by means of specific pressure device.

The carbon strip shall allow an easy substitution without dismounting the whole pantograph.

All necessary pantograph tests on the line shall be realized with under responsibility of the supplier.

To achieve a high quality of current collection it is necessary that the mass of the moving components of the pantograph shall be as low as possible, given the other structural constraints on the pantograph. Particular attention shall be paid to minimising aerodynamic influences by the use of proper shaped arms and linkages hidden within these arms.
Furthermore, the pan-head design, carbon carrier section and variable incidence elbow vanes also shall ensure that the force limits applied to the overhead infrastructure are not exceeded and that true bi-directional optimal performance is achieved with this single arm asymmetric arrangement.
Maintenance and overhaul intervals shall be kept to a minimum but with a high reliability by the use of externally lubricated precision sealed needle roller bearings.

5.2.3. Pneumatic Control Unit

The pneumatic control unit function will feed the air pressure in the pantograph pneumatic line. The air pressure shall be used by the pantograph pneumatic equipment for:

- Guarantee the pantograph extension when Loco is stationary or running (pantograph operating)
- Guarantee the movement speed when pantograph is raising or lowering (pantograph not operating).

The supplier shall declare in proposal phase the following data:

- Pressure Operating Range: [Minimum Pressure, Maximum Pressure]
- Raising Pressure: [Minimum Pressure]

The Maximum Operating pressure shall be < 10 bar.

5.2.4. Static Force

The necessary pressure to deliver the required force shall be provided by a pressure device and properly adjusted before conducting the test.
The curves representing the static force obtained shall be in accordance with the EN 50206 standard.

5.2.5. Pantograph vs catenary interface

The pantograph shall operate correctly in the full range of the catenary height and stagger. In particular, the following geometric data shall be respected.

5.2.5.1. Catenary height above Top of Rail (TOR)

Max. Height:	6200mm
Min. Height normal of main lines:	5000mm (5750 inside the depots)
Min. Height in tunnel:	4960mm

5.2.5.2. Catenary stagger

The maximum lateral deviation of the catenary shall be 400 mm

5.2.5.3. Insulators mounting surface

Max Height of the insulator baseplate mounting surface:	3970 mm above TOR
Min Height of the insulator baseplate mounting surface:	3820 mm above TOR

5.2.5.4. Pantograph height

Minimum live parts height above insulator mounting:	288 mm
Top of contact strips (in horizontal pos.) above insulator mounting surface:	598 ± 10 mm
New contact strip minimum working height above insulator mounting surface:	788 mm
Worn contact strip maximum working height above insulator mounting surface:	2788 mm
Minimum extension:	2000 mm
Maximum extension:	2500 mm

This Technical Specification cannot be REPRODUCED OR USED for any purposes without the written consent of TÜRASAŞ

5.3. MANUFACTURING

NA

5.4. PAINTING

The bidder can propose its own painting specification to ADMINISTRATION.
Concerning resistance to corrosion, design and processes shall take in account the effect of potential galvanic corrosion.
The colour of products is TBD by the Administration.

5.5. INTERFACE SPECIFICATION

5.5.1. Mechanical Interface between pantograph and the locomotive

The pantograph must be connected to the locomotive roof by means of nr. 3 supporting insulators which shall allow to respect the creepage and clearance distances specified in the EN 50124-1.
The mechanical interface shall be supplied completely with all the necessary elements to have a fixation with the relevant points and brackets available on the roof of the vehicle.

The diameter of the insulator fins shall be 215 mm.

The insulator baseplate dimensions are shown in the picture below:

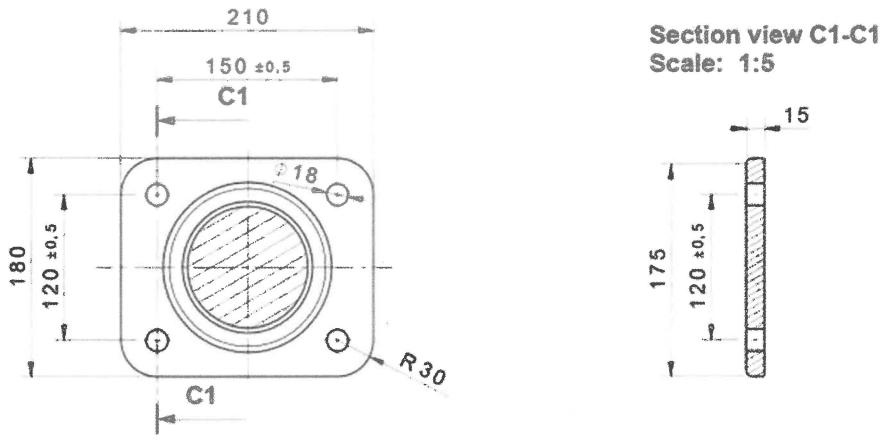

Insulators distance between axes:

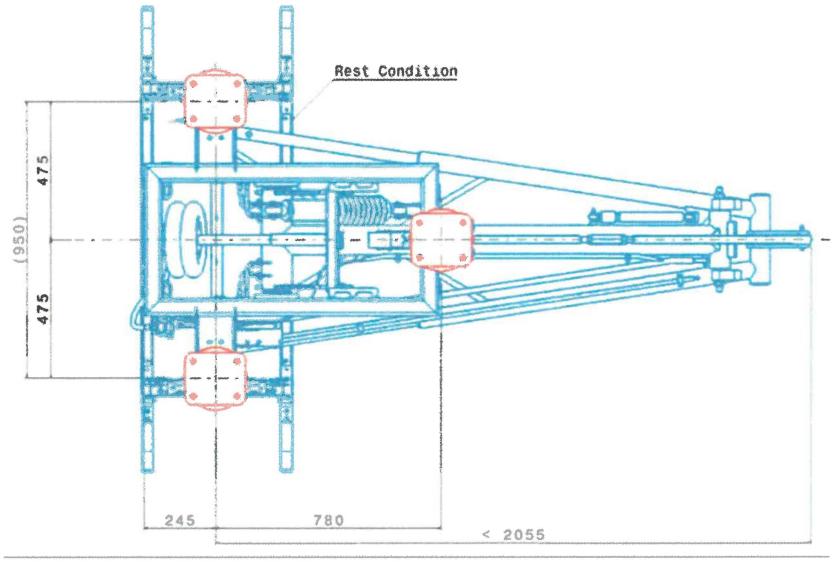

Figure 1: Insulators distance in the pantograph

- Y direction: 950 mm ± 1 mm
- X direction: 780 mm ± 1 mm

The air pipes interface shall comply the picture below:

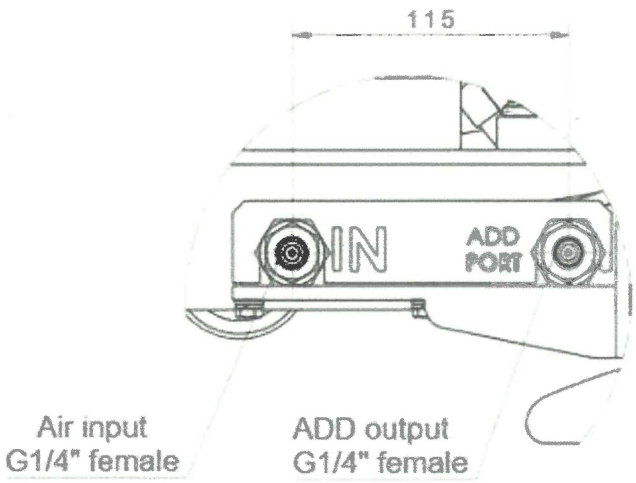

Figure 2:Air pipes interface

The length of the insulated pipes, which are part of the contractor scope of supply, will be communicated by the Administration to the Contractor.

The pantograph shall be mounted and installed in accordance with the orientation and layout depicted in Figure 3 below:

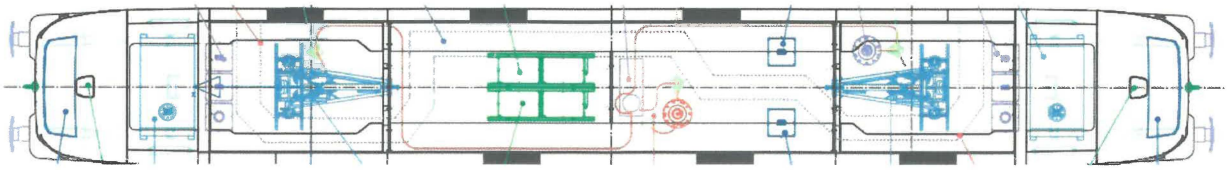

Figure 3:Layout Electric Locomotive

5.5.2. Electrical Interface

The high voltage shall be on the base frame, the relevant screws, nuts, bolts and washers necessary for the fixation of the HV cable to the pantograph shall be included in the scope of supply.
Supplier shall indicate the proposed fixing points for the HV cables, at least 2 fixing points for each side of the pantograph shall be available.
The pneumatic items necessary for the correct functions of the pantograph shall be supplied with the relevant mating connectors; it is preferrable to have grouped all the elements in a single box/plate and to have a single connection point (single connector) for all the pneumatic elements which are necessary for the panto control.
As summary, shall be included in the scope of supplier:

- Screws, nuts and washers used for the connection of the HV cables
- All connectors (fixed and mating) used for external elements, such as valves and pressure stat; if these elements are in a single board/box, supplier shall route all the cables of these elements to a single connector which will be the only interface to vehicle lines; in this case supplier shall include in the scope of supply the mating and the fixed part of this connector. Independently, Supplier shall supply all the mating connectors of the elements.

As for reference, low voltage of the Loco is 110 V DC nominal.

5.5.3. Pneumatic Interface

The pneumatic equipment of the pantograph is reported as an example in the following scheme.

This Technical Specification cannot be REPRODUCED OR USED for any purposes without the written consent of TÜRASAŞ

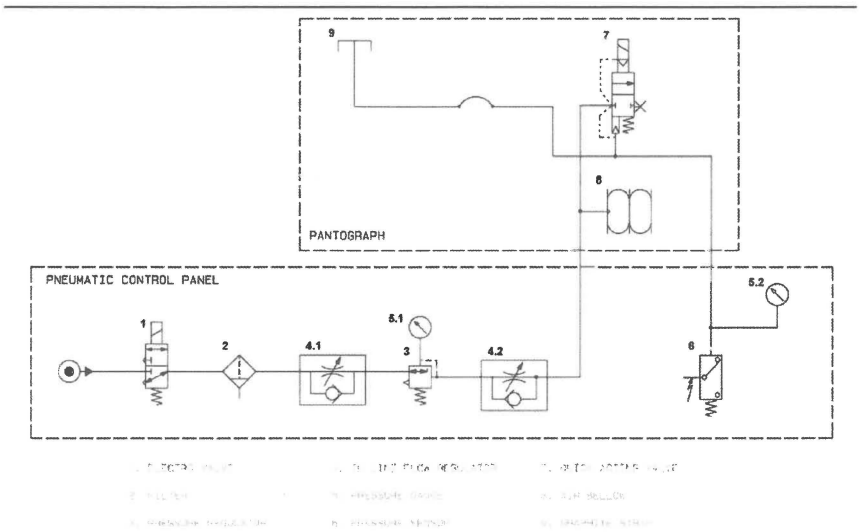

Figure 4 – Pneumatic Concept Scheme

The pneumatic equipment above shall be in the pantograph scope of supply, which includes the devices:

- To control the Up/Down command
- To adjust the contact force
- To adjust the raising speed
- To adjust the lowering speed
- The realize the maximum pressure safeguard.
- To realize the automatic dropping in case of contact strips failure (ADD)
- To inform the Train Control about the correct pressure of the command cylinder

As defined in the previous section, a single box/plate which collect all the pneumatic elements is requested, to be installed inside the LOCO.

The dimensions and the characteristics of the pneumatic interfaces to connect the pneumatic lines with the pneumatic system available in the vehicle. All the pneumatic connections of the elements which composes the pantograph system (panto, valves, …) shall be included into the scope of supply, length of relevant piping and tubes will be given in design phase.
Pneumatic interfaces with the LOCO pneumatic lines shall be indicated in the design phase.

The contractor shall supply and design of insulated pipe connections that provide electrical insulation between the metal pneumatic pipes on the locomotive roof and the pantograph (to ensure safe and secure operation).

5.5.4. Digital and/or Analogue Inputs/Outputs

TBD
The Contractor shall provide all data required by the TCMS for free.

5.5.5. Earthing

For protective provisions relating to electrical hazards on railway vehicles EN 50153 - standard is valid and shall be obeyed.
All equipment causing an electric shock shall be protected against direct contact.
All conductive surfaces of electrical equipment on the vehicle shall be connected to an earthing point for equalization of the electrical potential.
This includes conductive surfaces of cubicles, doors and covers.
Exceptions are small items of interior trim in an environment otherwise protected by bonding to car body and/or insulation (e.g. grips, coat hooks, etc.).
All equipment operating at AC-voltage >25V or at DC-voltage >60V shall be earthed for safety.
Each earthing point of the equipment shall be designed as follows: the earthing points shall be of good electrical conduction to ensure low touch voltage, the earthing points shall have large contact surface and shall be able to carry a possible short circuit current.
A design according to EN 60529, min IP20 (>12,5mm) is required for cubicles containing Band III voltages.
The min IP20 shall be achieved when there are situations when the cubicle is open and Band III voltage is live.
Each earthing point shall be easily accessible for assembly.
The Supplier shall provide an earthing diagram of its equipment including earthing bonds and shields.
The Supplier shall indicate which cables of his system will be shielded.
Cable shielding may only be used for shielding purposes and NOT as signal, ground or reference wires.
If supplier does not request different connection, cable shields shall be grounded on both ends in order to obtain high shielding efficiency against electric and magnetic fields.
This requires potential equalisation between both grounding points, e.g. through chassis or appropriate structural components.
Grounding of cable shields shall be made with low impedance (large contact surface, preferably over 360 deg. circumference).
Grounding by means of sheath wires (pig tails) or connector pins is NOT permitted.
The Low Voltage 0V level in the cars is floating, so shall be avoided an internal connection in the equipment between metallic chassis and the 0V connection; grounding connections in the equipment shall not be connected to car Low Voltage DC power supply.

5.6. ENVIRONMENTAL CONDITIONS

5.6.1. Climatic condition

The system object of the present document specification shall work properly in the specified climatic conditions (temperature, rain, snow, ice, sand, dust, wind and so on) in particular sand, ice and snow shall not be cause of malfunction.
General climatic conditions in accordance with the EN 50125-1 standard are defined in the following document:

- TŞ400048 Electric CoCo Locomotive General Technical Specification

5.6.2. Noise, Vibration and Shock

General noise, vibration and impact conditions are reported in General Technical Specification and Noise Requirement document.
With regard to shock and vibration, the Contractor shall demonstrate that the equipment in the pantograph has been tested and verified in accordance with the IEC 61373 standard.

5.6.3. Protection (IP)

The pneumatic box/plate IP level shall be min IP20, due to internal installation, in accordance with EN 60529.

5.6.4. Electromagnetic Compatibility (EMC)

The supplied system and components shall be compliant to EMC requirements established by relevant norms and standards listed below:

- EN 50121-1 Railway Applications – Electromagnetic Compatibility – Part 1: General
- EN 50121-3-1 Railway Applications – Electromagnetic Compatibility – Part 3: Rolling stock – Train and complete vehicle
- EN 50121-3-2 Railway Applications – Electromagnetic Compatibility – Part 3: Rolling stock - Apparatus

5.7. SYSTEM AND COMPONENTS LIFE

The required life shall be equal or greater than 30 years considering the periodical maintenance.

5.8. MATERIAL REQUIREMENT

5.8.1. General Requirements

Materials shall be suitable to allow the normal maintenance activities without need to adopt special protections including welding, cuts and so one. They shall be suitable for the waste disposal without need of particular care.
Material Safety Data Sheets (MSDS) and all information about safety and health shall be provided, even for consumables like lubricants and cleaning agents.
The choice of materials shall be done to prevent corrosion in every usage condition.
The bidder shall give the list of every material used together with their offer.

5.8.2. Fire Resistance Behaviour

According to TSI LOC&PAS materials requirements for fire resistance behaviour are expressed through the index R(n) described in the standard EN 45545-2, "Table 5". To correctly define the requirement, it is necessary to know the hazard level of the train that, in this case, is HL2.
These requirements for materials depend not only on the component intrinsic nature, but also on the position, shape and layout, surface exposure, relative mass and thickness of the material considered.
To identify the relevant R (n) requirements, in "Table 2" of the standard EN 45545-2 several products and their position on the train are listed.

According to EN45545-1 and EN45545-2 standards the locomotive hazard level will be HL2, and operation category will be 2N (freight locomotive).

In the table below the material requirements for the components of the cars are reported.

Name	Applicable Product type (No)	Definition	Details	Requirement
Refer to EN45545-2	Non listed product	Non listed product	R7	Refer to EN45545-2

Table 6 – Materials Fire Behaviour

Any material used, even if not included in Table above, must meet the requirements specified in chapter 4 of the EN 45545-2 standard.
The Bidder/Supplier shall give the list of the inflammable materials used with material type, quantity and fire resistance behaviour tests.
The documentation presented by the Bidder or the Contractor relevant fire performance will be examined for approval by the Notified Body / Designated Body in charge of certification of the CoCo

Project nominated by the ADMINISTRATION. The Contractor /Bidder shall be responsible to perform all necessary activities which are required by Notified Body / Designated Body.

5.8.3. Smoke opacity and toxicity

All the materials used do not emit toxic gases in such quantities as to be harmful.
The parameters taken as reference for the selection of materials, and the requirements they must meet, are described in "Table 5" of the EN 45545-2 standard with reference to the classification of the hazard level of the train and the set of requirements R(n) to which the material is associated.

5.9. WEIGHT

The Supplier shall be committed to the process of weight management required in order to meet target weights as the train design develops.

- The max weight of the pantograph (included insulators) shall be 140 kg
- The max weight of the pneumatic control panel shall be less than 7 kg.

5.10. LABELS/MARKING

The system/equipment/components supplied shall be provided with technical markings, in order to fulfil requirements of electrical safety, and provide information to maintenance personnel.

Wherever required for health and safety purposes, including where necessary to comply with legislation, parts shall be fitted with suitable safety and warning signs.

In particular the parts supplied, including all replaceable parts, shall be identified by a label showing:

- Serial number
- Data of manufacturer
- Date of manufacture
- Contractor's part number (if any)
- Revision level
- Company's part number (if any)

Format and positioning of all labels/marking shall be subject to approval by ADMINISTRATION. Wherever possible, the position shall be such that any company information (Logo and brand etc) cannot be viewed when the relevant part is installed within the vehicle.
All labels shall be permanent and indelible

6. RELIABILITY, AVAILABILITY, MAINTAINABILITY AND SAFETY (RAMS) REQUIREMENTS

The Contractor shall make RAMS analysis according to TB50165.

7. TRAINING AND MANUAL

7.1. TRAINING

The ADMINISTRATION considers it a priority that the maintenance staff/operators receive a high level of training in order to enhance their skills and experience for carrying out the maintenance of the supplied systems/equipment. Within this scope, the Contractor shall provide the ADMINISTRATION's or End Client's personnel with comprehensive training on the supplied systems/equipment, including both theoretical (in a classroom environment, supported by computer simulation or video) and practical (hands-on training in a workshop environment on the relevant system/equipment) sessions free of charge.

The level of training shall be congruent with the complexity and criticality of the system/equipment in object, therefore training performed by the Contractor shall be properly prepared in order to be efficient and effective.

This training shall give to the trainees a general overview of the system/equipment, of its performance, as well as sufficient knowledge for carrying out periodic maintenance of the system/equipment and its components, fault finding and repair and carrying out works both of preventive and of corrective maintenance. Additionally, the Contractor shall give detailed training about assembly/disassembly of system/equipment.

Generally, the training activities are divided in two steps;

- The first concerning a general description of the system/equipment and depth training for carrying out scheduled maintenance needed during the first 2 years of operation.
- The second step completes the knowledge about all maintenance aspects with particular care to overhaul activities.

The Contractor shall provide at least 2 days of training to the Administration's personnel and End Client's personnel at the Administration's facilities.
The training documentation shall be prepared in English and Turkish languages in number of participants by the Contractor. The language of the training shall be supplied in Turkish by the Contractor."
The bidder shall propose and detail in the tender phase the training activity to be carried out.
Then ADMINISTRATION and the Contractors will discuss and agreed details pending on End Client requirements.

7.2. MAINTENANCE MANUAL

7.2.1. Main Features Of The Manual

The contractor shall prepare an integrated manual for the operation and maintenance of the equipment within the scope of supply, in accordance with the EN15380 standard and its annexes.

The manuals shall contain:

- supplied system/equipment description
- preventive maintenance tasks description
- corrective maintenance tasks description (repair instructions included)
- information in order to carry out the overhaul of the system/equipment and the heavy repair (if it is repairable and off Loco).

The manual will be used as the basis for COCO LOCO operation and maintenance by End Client staff.
The manual shall be prepared in electronic editable format and the language UK English and Turkish. The Contractor shall be responsible for ensuring that the maintenance manuals remain up-to-date, accurate, and applicable until the end of the general warranty period of the final delivered product. During this process, the opinions, requirements, and requests communicated by the ADMINISTRATION and/or the End User shall be taken into consideration. The ADMINISTRATION reserves the right to request modifications, corrections, or additions in case the submitted maintenance manuals are found insufficient during its review. The Contractor shall be responsible for carrying out the necessary revisions in a timely and complete manner in line with such requests.

7.2.2. Contents Of The Manual

The manual shall contain as minimum the following information/instructions:

- Description and Operation
  - General description and operation of system/equipment
  - Functional description and operation of all LRU's and components
  - Mechanical and electrical data sheets for all LRU's and components.

- Maintenance Activities
  - Preventive Maintenance Plan including the maintenance periodicity (frequency) table for system/equipment.
  - Reported information shall be the same of those described by the Preventive Maintenance analysis and be linked with detailed Maintenance Instructions.

- Preventive Maintenance Plan shall report reference to specific/special tools needed for the maintenance works (if used).
- Maintenance Instructions shall report step by step detailed description of each task of the maintenance plan in order to include all information necessary for carrying out the relevant work.
- The Preventive Maintenance Plan shall include all activities foreseen for the system/equipment from daily inspection up to major repair/overhaul.

- Preventive Maintenance card/instruction

  Each maintenance instruction shall include:
  - task periodicity
  - safety warnings
  - cleaning materials
  - recommended lubricants
  - torque values
  - special tools (if any): as special tool is intended either a tool (hardware and/or software) that is exclusively produced by the Contractor and is essential for system/equipment maintenance, either a tool available on market but expensive, sophisticated, with long lead time and so on
  - step by step activity description with necessary schemes, drawings and illustrations, including:
    - scheduled activities (greasing, topping up, visual check, etc)
    - removal and refitting
    - off- LOCO overhaul
    - final functional check

The Contractor is responsible to update the maintenance instructions until the end of the general warranty period of the last supplied equipment.

- Corrective Maintenance card/instruction

  Each maintenance instruction shall include:
  - trouble shooting
  - safety warnings
  - torque values
  - special tools (if any)
  - step by step activity description with necessary schemes, drawings and illustrations, including:
    - removal and refitting
    - off- LOCO repair
    - failure diagnosis
    - final functional check

The Contractor is responsible to update the maintenance instructions until the end of the general warranty period of the last supplied equipment.

7.2.3. Format Of The Manual

The format of the Maintenance Manual can vary according to the ADMINISTRATION and the End Client requirements, therefore here following are reported some rules generally applicable.

Specific requests shall be communicated when available.

- The Manual shall report/contain the same references, drawings, schemes, component codes, Part Numbers, definitions, descriptions, terminology and so on used in the system/equipment configuration and design documentation to guarantee a perfect correspondence and to avoid mismatching during tasks performance.
- In the manual, the parts should be shown by numbering on the exploded picture. Within the scope of this picture, there should be a list consisting of Part No, Stock or Part Code No, Part Name and Quantities
- It is important to properly identify the LRUs/components by utilizing the same identification name reported by the technical drawings.
- All maintenance manuals shall be prepared electronically and submitted to the ADMINISTRATION via encrypted sharing areas using cloud-based storage. The contractor is responsible for submitting each new version/revision electronically and retaining revision records for previous versions. No printed copies will be delivered. The contractor shall deliver two copies of the manuals with two USB flash drives.
- The documentation in electronic format shall be in a completely editable form (Office Word version TBD)
- The PDF format can be used as formal delivery of the documentation (in order to be used as official delivery towards End Client)
- Pictures and photos shall be inserted and not simply linked.
- Photos should be only JPEG format.
- Pictures should be only TIFF format.

Derogations from above listed issues can be discussed and agreed between ADMINISTRATION and the Contractors pending the respect of End Client requirements.

8. TESTING, INSPECTION AND ACCEPTANCE

CoCo LOCO will be certified in accordance with the latest version of the TSI regulations. If all products and services (including hardware, software, system main and subcomponents) to be procured under the tender are evaluated within the scope of TSI requirements, the contractor will be responsible for all relevant certifications for the equipment to be provided to NoBo.

8.1. INTRODUCTION TO TEST AND INSPECTION

The Contractor shall perform the tests and the inspection in accordance with the Approved Test Procedure and the Approved Inspection Specification.

ADMINISTRATION and/or end Client have the right to witness any of these tests and inspections at any stage of test and inspection procedure.

In the event that any system or component has been previously tested and its adequacy has been demonstrated, and the ADMINISTRATION waives the type test upon finding it acceptable, the Contractor shall submit the following documents to the ADMINISTRATION for approval:

- A technical analysis explaining the differences between the previously tested product and the product used under the current contract,
- A technical report demonstrating that such differences have no adverse impact on the operation and performance of the product as defined in this specification,
- Approved test procedures, reports, and certificates pertaining to the previously tested product (including repair activities and checklists).

All test and inspection documents, as well as final reports—including the verification of design activities and the assessment of any improvements to the checklists, if applicable—shall be submitted to the ADMINISTRATION and shall only become valid upon approval by the ADMINISTRATION.

If the test to be performed is defined as a "type test" within the scope of the TSI, the following principles shall be followed:

- The Procedure under the responsibility of the CONTRACTOR shall be shared with and approved by the Notified Body (NoBo).
- The test, and relative documentation, shall be done in either an accredited lab, or with the NoBo attendance
- The test, that will be done on the vehicle, shall be planned in coordination with NoBo (attendance required), Contractor and Administration

8.2. TYPE TESTS

Type tests are required to verify that the components of the system object of the scope of supply, operate in accordance with the Approved Design Data.

The Contractor shall perform Type Tests, in accordance with a test procedure approved by Administration with Administration and/or End Client participation.

During testing, the criteria shall be observed and recorded. All alterations, adjustments and maintenance works required by Administration shall be carried out by the Contractor.

The Contractor has the responsibility for the success of mentioned Type Tests.

8.3. ROUTINE TESTS

Routine tests are required to verify that the components of the system object of the scope of supply have been built in such a way that it satisfies the requirements of the Approved Design Data as verified by the Type Test.

The Contractor shall perform routine tests in accordance with a test procedure approved by Administration under his responsibility, and, if necessary, with Administration participation.

During tests, the criteria shall be observed and recorded and necessary alterations, adjustments and maintenance works shall be carried out.

Records from Routine tests shall be kept by the Contractor and made available timely for Administration and/or end Client's inspection.

All copies of the approved routine test results shall be submitted. Additional copies of records of all tests/inspections results shall also be kept at the Contractor's work to be made available to Administration or their representative on demand.

This test shall include functional test, visual inspection and dimensional inspection, as a minimum. The test details shall be approved.

8.4. FIRST ARTICLE INSPECTION

The Contractor shall perform a First Article Inspection (FAI) of the components of the system object of the scope of supply at the Contractor's factory with ADMINISTRATION and/or end Client participation in accordance with an inspection specification issued by ADMINISTRATION and/or

end Client, prior to serial production in order to confirm that the hardware & software fully complies with the Contractor's scope of supply design and manufacturing process.

Contractor shall submit FAI test procedure to ADMINISTRATION at least 4 weeks before FAI. If any changes are requested by ADMINISTRATION, Contractor shall comply with these requests.

During the First Article Inspection (FAI), the Contractor shall have available all pertinent documents related to the design and production process, test records, material certifications, etc. Any nonconformities identified during the FAI shall be considered a critical quality defect. If all requirements are not met, a Hardware Review shall be requested. The Contractor shall initiate a System Review process covering the hardware and associated software components and shall implement the necessary corrective actions. Upon completion of the System Review, the FAI shall be repeated to verify that the nonconformities have been resolved. The System Review and the repeated FAI shall be carried out in such a manner as not to affect the project delivery schedule.

Upon acceptance of the FAI by ADMINISTRATION and/or end client, the Contractor is then free to proceed to manufacture all pertinent hardware. The hardware shall meet or exceed the quality standards set at the FAI and must incorporate any comments made by ADMINISTRATION and/or end client at the FAI.

All domestic and international accommodation and travel expenses (including round-trip international airfare, accommodation, and transportation between workplaces) for all Administration personnel traveling to the Contractor's facilities for First Article Inspections (FAI) will be covered by the Contractor. Administration personnel will participate in First Article Inspections for a maximum of 9 personnel/ day.

8.5. CONTRACTOR TECHNICAL ASSISTANCE

The Contractor shall provide all necessary technical support and engineering services for the product covered by the technical specifications and the equipment and sub-components (hardware and software) that constitute this product during the initial installation and commissioning to be carried out at the ADMINISTRATION's facilities; Installation and commissioning procedures, instructions, and step-by-step checklists shall be available for verification and approval during this process, and details shall be finalized during the project process.

The Contractor's support shall cover, at a minimum, installation, connections, configuration, system verification, and commissioning/homologation activities.

The Contractor shall actively participate in the installation of the products and sub-components (hardware and software) within the scope of supply on the first locomotive, in the initial system commissioning processes to be carried out at the ADMINISTRATION's facilities, as well as in track

tests conducted on the national railway network, test tracks, and/or at the End Client's site. The Contractor shall monitor the performance of the supplied products and sub-components under field conditions and carry out verification/testing activities in coordination with the ADMINISTRATION.

For series production locomotives, the installation, disassembly, and testing of the supplied products and sub-components shall be performed by certified ADMINISTRATION personnel under the Contractor's responsibility. To this end, the Contractor shall provide all necessary technical support to the ADMINISTRATION for the installation, disassembly, and testing of the supplied products and sub-components on the first five locomotives. Following the training and technical support provided for the installation, disassembly, and testing processes, the Contractor shall certify the ADMINISTRATION personnel who participated in the training.

8.6. COMMISSIONING

8.6.1. Type Commissioning Test

In order to demonstrate the compliance of the supplied products and sub-components (hardware and software) with the requirements of this technical specification and its annexes, static tests (at the ADMINISTRATION's facilities) and dynamic commissioning tests (on railway track) shall be carried out for the first prototype locomotive under the Contractor's responsibility, with the participation of the ADMINISTRATION and the End User, in accordance with the test procedures prepared by the Contractor and approved by the ADMINISTRATION and/or the Notified Body (NoBo).

If the tests to be performed are defined as a 'type test' within the scope of the TSI, the test procedure shall be submitted to and approved by the NoBo (Notified Body). The on-board static and dynamic tests shall be planned in coordination between the Contractor and the ADMINISTRATION and executed with the approval and participation of the NoBo.

8.6.2. Routine Commissioning Test

On the serial LOCOs, routine commissioning test for the system will be performed by ADMINISTRATION in workshop and service track under the Contractor's responsibility.

9. AUTHORIZATION TO START PRODUCTION

The CONTRACTOR shall prepare a Project Plan that includes all information specified in this specification, the delivery of parts and documents, key events, and the schedule of main activities, and shall submit it to the Administration for approval each time it is published. The Contractor shall commence production in accordance with the Project Plan and shall regularly attend Project Progress Meetings within the specified schedule. If necessary, the Contractor shall update the Project Plan as a result of the meetings.

Throughout the production process, the Contractor and Subcontractors shall be responsible for the delivered components and systems. The Administration shall have the right to request modifications or alternative solutions for the systems or components if deemed necessary for installation, operation, interface, or similar reasons; these requests shall be mutually agreed upon in meetings with the Contractor.

Technical modifications prior to the FAI shall be managed under the Contractor's Quality Management System, whereas modifications after the FAI shall be subject to the ADMINISTRATION's approval. The Contractor shall monitor modifications in accordance with the plan and shall notify the ADMINISTRATION of each completed modification, including date, serial number, level, and location information.

9.1. DESIGN FREEZING

During the design freeze phase, all design data, interfaces, technical drawings, and engineering calculations related to the systems, subsystems, and components developed within the scope of the tendered work will be finalized. This phase must be completed within the timeframes defined in the project schedule and cannot be altered without the written approval of the Administration.

The Contractor is obligated to submit all documents (design reports, technical drawings, interface definitions, and, if necessary, prototype test results) that will form the basis of the Design Freeze to the Administration in a complete and timely manner.

The Design Freeze shall be completed within the specified timeframes and in accordance with the project schedule.

9.2. AUTHORIZATION TO START PRODUCTION

According to the final design criteria mutually agreed upon as a result of the design freeze meetings, the Contracting Authority will authorize the Contractor to manufacture the first product(s) within the scope of supply.

9.3. AUTHORIZATION TO START MASS PRODUCTION

The Contractor will be authorized by the Administration to start mass production after the FAI (First Product Inspection) is performed on the first product(s) produced by the Contractor after receiving the Authorization to Start Production.

10. ACCEPTANCE

The acceptance report will be issued by the ADMINISTRATION after the following conditions have been met:

- ✓ Complete delivery of the products and sub-components (hardware/software) within the scope of supply
- ✓ Demonstration of compliance with all standards and technical requirements defined in this technical specification and its annexes, supported by conformity declarations, inspection, and test reports
- ✓ Complete submission of documentation to the ADMINISTRATION by the Contractor
- ✓ Successful execution of the locomotive system's on-track tests (commissioning type tests)
- ✓ Successful completion of the approval process by the NoBo/DeBo.

Acceptance of the first product shall not be construed as acceptance of the entire quantity requested. Each item of the contract shall be evaluated individually, and acceptance shall be carried out separately for each item.

11. PACKAGING AND STORAGE CONDITIONS

11.1. PACKAGING

The products and all their sub-components (hardware/software) shall be delivered in suitable packaging with sufficient strength to withstand impacts and transport damage, including effects from climatic conditions such as dust, rain, snow, sun, wind, etc.

Packaging boxes shall be stackable and suitable for lifting by forklift (where reasonably applicable) or overhead crane.

Even if the products cannot be mounted on the locomotive promptly and are stored for long periods (e.g., up to three years) without use, they shall be delivered in packaging that fully protects them from any damage.

All packaging and crates shall carry the following information in a clear, legible, and weather-resistant manner:

- Manufacturer's name, address, and registered logo
- Product name, part number, and technical specification number
- Serial number and manufacturing date (if applicable)
- Contract number and date
- Quantity of products in the package and serial numbers of components
- Batch number (if applicable)
- "Project No: XXXXXX" statement

If a box contains multiple components:

- Each component shall be labelled separately
- A component list shall be included inside and outside the box/crate
- Lists shall be finalized with the ADMINISTRATION's approval

Systems/equipment/components:

- Shall be packaged in sets required for the production of one locomotive
- Packages shall be arranged separately for mechanical and electrical production lines
- Package lists shall be finalized upon the ADMINISTRATION's approval and a copy shall be provided to the ADMINISTRATION prior to shipment

Products and all their sub-components (hardware/software) shall be wrapped in appropriately thick bubble wrap, secured to wooden crates, and delivered on pallets. Crate weights shall not exceed 400–

500 kg. Deliveries shall be made, at the Contractor's expense, to TÜRASAŞ Eskişehir Regional Directorate.

If packaging or delivery documents are missing or non-compliant, the situation shall be recorded in a report, and the products shall be returned to the Contractor without acceptance. If the returned materials are reshipped after the contractual delivery date, delay penalties shall apply. The Contractor shall not be entitled to any claims due to delays caused by packaging.

11.2. STORAGE CONDITIONS

The Contractor shall provide any useful information it is deemed necessary for the correct storage of the goods delivered.
In addition, the necessary conditions and procedures to be applied in order to prevent damage to the products stored in warehouses without being used for a long time will be delivered by the Contractor in detail.

11.3. MOUNTING AND HANDLING

All the components shall be supplied ready for installation and possibly already mounted and pre-regulated. Special care is requested to the Contractor to list all the necessary tools for mounting and maintenance.

12. DOCUMENTS TO BE DELIVERED TO THE ADMINISTRATION ALONG WITH THE PRODUCT/EQUIPMENT

The following tables report the list of requested documents (with schedule) to be supplied to ADMINISTRATION.

Table 7 shows the documentation which shall be given by the Bidders in the offer phase.

Table 8 and Table 9 show the documentation which shall be provided by the Contractor for the Preliminary Technical Review and the Detail Technical Review respectively.

Id.	Stage 1 -OFFER Phase	Time Schedule	Language
1.1	Clause by Clause commentary of present Tech. Specification	With offer	Turkish and English
1.2	Scope of supply list		Turkish and English
1.3	General description of the proposed system, including all the characteristics and functionalities and technical documentation and information requested in this specification as preliminary		Turkish and English
1.4	Preliminary 3D models or installation drawings showing the main external space envelope		English
1.5	Preliminary applicable schemes		Turkish and English
1.6	Preliminary definition of main I/F characteristics with the other LOCO systems		Turkish and English
1.7	List of tests (FAI, routine, type, commissioning and homologation) that shall be performed on components and systems		English
1.8	Declaration of Conformity to applicable standards According to EN17050		English
1.9	EC Declaration of Conformity according to the TSI LOC&PAS 1302 if the scope of Supply is considered "Interoperability Constituent" or, alternatively, a signed undertaking stating that the EC Declaration of Conformity, in accordance with TSI LOC/PAS 1302, will be provided upon delivery of the product		English
1.10	IRIS or ISO 9001 Certification of the Bidder (If the Bidder is an agency of the manufacturer, the Bidder shall show the manufacturer's certificate)		English
1.11	List of special tools and test equipment		Turkish and English
1.12	Project schedule, in line with project milestones		Turkish and English
1.13	Sub Contractor List		English
1.14	Detailed part list with price information of each part		Turkish and English
1.15	Delivery time from order		English
1.16	Escalation formula for spare parts		English
1.17	Explanation on how to pack in pieces		Turkish and English

Table 7 – Stage 1 Offer Phase: list of requested documents and due date

Id.	Stage 2 - PRELIMINARY Review	Time Schedule	Language
2.1	First level drawings with weight and centre of gravity indications in 3D and 2D formats	Within one month after signing the contract	English
2.2	Technical description of the system, with system characteristics and performance		English
2.3	Functional description (normal and degraded mode) of the system, included diagnostic description		English
2.4	Design justification analysis reports		English
2.5	Definition and specification of applicable I/F's characteristic (mechanical, pneumatics, electrical, signals, I/O data, etc.)		English
2.6	Certificates of the fire smoke behaviour of non-metal materials and electric cables		English
2.7	Certificates of behaviour versus applicable emissions requirements		English
2.8	Preliminary applicable analysis reports (performance, consumptions, structural strength, etc.)		English

Table 8 – Stage 2 list of requested documents and due date

Id.	Stage 3 - DETAIL Review	Time Schedule	Language
3.1	Definitive drawings with weight and centre of gravity indications in 3D and 2D format.	Within one month before FAI / with product/ equipment delivery	English
3.2	Definitive schemes		English
3.3	Installation drawings		English
3.4	Installation instruction		Turkish and English
3.5	Detailed description of the supplied components or systems		Turkish and English
3.6	All the technical documentation and information requested during the project (including final version of documents of previous stages)		Turkish and English
3.7	Procedures of tests (FAI, routine, type, commissioning and homologation) performed on components and systems		Turkish and English
3.8	Available Reports of tests (routine, type, commissioning and homologation) performed on components and systems		English
3.9	List of special tools and test equipment		Turkish and English
3.10	LRU list		Turkish and English
3.11	Spare Parts and Equipment List (including order codes)		Turkish and English
3.12	Servicing and lubricating table		Turkish and English
3.13	Final documentation for Certification		Turkish and English
3.14	EC Certification according to the TSI LOC&PAS 1302 if the scope of Supply is considered "Interoperability Constituent"		English
3.15	RAMS and LCC documentation: see dedicated paragraphs		Turkish and English
3.16	User Manuals		Turkish and English
3.17	Maintenance Manuals (including periodic maintenance Schedule)		Turkish and English
3.18	Calculations, tests and analysis report requested by TSI		Turkish and English
3.19	3.1 certificates of the product/equipment according to EN 10204		English
3.20	Documents showing compliance to EN 45545-2 (Certificate of Conformity, Test Report etc.)		Turkish and English
3.21	Warrranty" documentation		Turkish and English

Table 9 – Stage 3 list of requested documents and due date

The Bidder/Contractor shall review and confirm the above lists of documents for all the phases of the project. Any deviation shall be submitted to ADMINISTRATION for approval.

In Stage 1, the IRIS and ISO 9001document document submitted by the Bidder will be examined by the Administration in terms of its compliance with the scope of the product/work subject to the tender.

The documents specified in Stage 3 shall be delivered to the Administration both before the FAI and together with the product/equipment.

The documents to be delivered by the Contractor in Stage 1 and Stage 3 will be provided to the Administration in 2 (two) USBs.

Notes:

- All components, including their sub-elements (cables, connectors, etc.), shall be provided as complete 3D models in ".step" format. Connectors shall be prepared separately from the 3D model to allow their use in harness design.
- 2D drawings shall be provided in *".dwg or .dxf" format (plus PDF).*
- Electrical schematics shall preferably be provided in EPLAN Electric P8 format; alternatively, in .dwg/.dxf format (plus PDF).
- All documents shall be provided in editable format as well as in PDF.
- In case both Turkish and English are used in the documents; the Turkish version shall be considered authoritative.
- Documents shall be delivered in a format compatible with the ADMINISTRATION's PLM system.
- All documents shall be prepared electronically and delivered to the ADMINISTRATION via cloud-based storage with secure access and additionally provided on 2 USB flash drives. After each update, relevant parties shall be notified by email in accordance with the communication matrix. Alternatively, the digital documents may be delivered on two copies of portable storage media.
- 3D design of electrical equipment and cables shall be provided in Catia Electric format (plus PDF) and/or in EPLAN Pro Panel or EPLAN Harness format.

ÜRA F.005	*This Technical Specification cannot be REPRODUCED OR USED for any purposes without the written consent of TÜRASAŞ*	07.04.2016 Rev:02

13. INTELLECTUAL AND INDUSTRIAL PROPERTY ISSUES

The following issues should be taken in account

1. Any projects and documents shared with the Contractor within the scope of the work subject to the tender shall not be used for any other purpose. The Contractor shall share all technical information only with the Administration
2. Administration shall be authorized, under the administrative contract, to use the products to be supplied by the Contractor (right of usage) – without prejudice to any mandatory legal provisions applicable and without any detriment to the Contractor's dignity and reputation.
3. In case of proven violation of an intellectual and / or industrial property right by the Contractor, the Contractor shall be liable for any direct, reasonable and properly documented damages resulting directly from such violation. If the Administration faces legal sanctions, it is allowed to recourse such sanctions to the Contractor within the scope of liability of the Contractor mentioned above, limited to the contract price. Upon the request of the Administration, the Contractor is obliged to fully inform and certify to the Administration whether the service to be undertaken is a matter of intellectual and industrial property.
4. This technical specification is a part of the contract between the Contractor and the Administration. The Contractor does not have the authority to distribute this document or any part of it to third parties without the approval of the Administration.
5. If an official document is requested and mutual communication causes any mistake; all possible information requests and their responses shall be made in written format and via e-mail.

14. WARRANTY

14.1. WARRANTY CONDITION

The Contractor shall warrant the quality of the products supplied under this Specification against failures, malfunctions, assembly and workmanship defects, except for cases arising from natural wear and tear and maintenance neglect; for a period of 400,000 km of operation or 24 months from the commissioning date of COCO LOCO, or 36 months from the delivery date of the products to the ADMINISTRATION, whichever expires first.

The responsibility of performing preventive maintenance on the normally used parts and the protective maintenance in cases where it is evidently clear that the root cause is not the own malfunctions of the unit, shall belong to ADMINISTRATION.

Throughout the warranty period, following the notification by ADMINISTRARION of any malfunction, the Contractor shall respond to that malfunction within two (2) working days and replace the malfunctioning parts and equipment or repair and fix the malfunction. The Contractor shall make available in Turkey throughout the warranty period the required service facilities in order to respond to the possible malfunctions and a sufficient number of spare parts or fully complete equipment within this time period.

Responsibility for making sure that none of the information, document, certificate, component, system, machine, software, technology and design the Contractor supplies to the Administration violates any brand, patent or third-party ownership rights belongs to the Contractor.

The contractor company shall provide a 10 (ten) year service and spare parts guarantee, valid from the end of the warranty period.

14.2. SYSTEMATIC FAULT / EPIDEMIC FAILURE

Upon commissioning of the first Pure Electric CoCo locomotive, any failures that occur repeatedly and in a non-random manner under specific conditions or inputs during the warranty period shall be considered systematic failures.

Additionally, after the mass-production locomotives have been put into operation and during the warranty period, if a failure within the scope of the warranty occurs in more than 15% of the same part/component in the first 24 locomotives, or in more than 10% of the same part/component in the 25th and subsequent locomotives, due to the same reason, it shall be considered an "epidemic failure."

Records of systematic failures shall be kept for a period of 24 months following the commissioning of the locomotive.

In addition, if mean time between failures (general average failure time) for the failures occurring in main components/parts used in all locomotives within annual periods during the guarantee term is shorter than guaranteed MDBF or MTBF value, such failure shall be deemed as an epidemic failure. In case of confirmed systematic faults, proper investigations shall be done in order to define a proper technical solution or modification including Spare Parts modification or replacement.

In case systematic/epidemic failures are confirmed, the necessary investigations shall be carried out in order to define an appropriate technical solution, including spare part replacement or modification, and a new warranty period for the solution defined within this scope shall be agreed with the ADMINISTRATION.
The CONTRACTOR shall perform, within the period specified by ADMINISTRATION, all necessary reinforcement, modification, material replacement, assembly and disassembly works required for the elimination of systematic/epidemic failures, at its own expense.
The expiration of the warranty period shall not relieve the CONTRACTOR of its obligations related to the subject matter of the contract. The CONTRACTOR shall remain responsible for remedying the systematic failures recorded by mutual agreement at the end of the warranty period.

15. OTHER ISSUES

Following points must be considered:

1. For matters not specified in the technical specification, the administrative specification shall apply.
2. The Contractor is responsible for all transportation costs.
3. The Contractor is responsible for work accidents that may occur during the work of the Contractor personnel at ADMINISTRATION facilities.
4. The food and accommodation costs of the supplier personnel belong to the Contractor.
5. The Contractor must comply with T.B. 2348 in its work within the boundaries of ADMINISTRATION facilities
6. The Contractor must comply with the safety, protective safety, occupational health and safety instructions and provide the protective materials required by the work and follow their use.
7. The contractor must comply with all kinds of warnings, signs and writings within the boundaries of ADMINISTRATION facilities.
8. All software used by the contractor (Computer Aided Design Programs (CATIA, AutoCAD etc.), MS Office. FEM Analysis Programs etc.) will be licensed. All responsibility in this regard belongs to the Contractor.
9. The Contractor is responsible for all kinds of damages and losses to ADMINISTRATION or third parties in relation to the obligations fulfilled within the scope of the work subject to the tender.

16. ANNEXES AND NOTES

16.1. Interchangeability

The Contractor must guarantee the interchangeability of the pantograph for the application on the CoCo Loco and on the E5000 locomotives.
To maintain such interchangeability all over the service life of both locomotives, any evolution of the configuration of the pantograph must be compatible with both locomotives operation, respecting the requirement of identical "Form, Fit and Function" (identical interfaces, aspect and functionality).